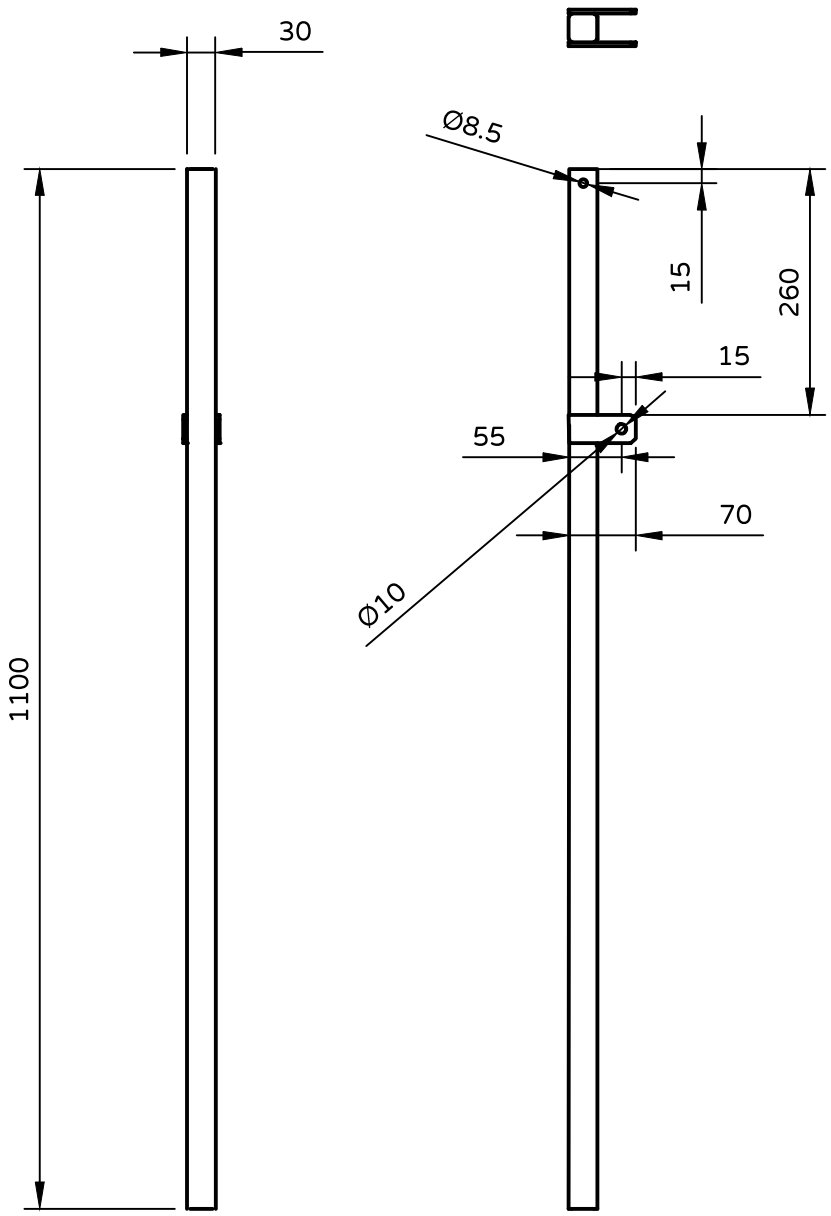

Item	Qty	Part Number	Description	Material
2	1	Tube 30x30x3 (1)	L.1100	Steel
1	2	Flat 30x4 (1)	L.70	Steel

Parts List
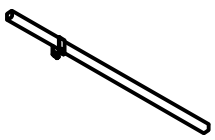
Dept. Injection	Technical reference website	Created by Precious Plastic	Approved by Dave Hakkens
		Document type Sizes in MM	Document status scale 1:8
		Title Framework Lever	DWG No. V2.0
			Rev. a4 / Date of issue 16-01-2016 / Sheet 6/10